Bancroft®

Pedestal Bathroom Sink

K-2347-1

Features

- Single faucet hole.
- Elegant oval basin.
- Combination consists of the K-2348-1 basin and the K-2346 pedestal.
- Coordinates with other products in the Bancroft collection.

Material

- Vitreous china.

Installation

- Pedestal

Recommended Products/Accessories

K-7605-P Angle Supply with Stop (pair)
K-8998 P-Trap

Included Components

Product consists of:
K-2348-1 Pedestal Bathroom Sink Basin
K-2346 Bathroom Sink Pedestal
Additional Components:
Pedestal accessory pack
rubber pads

Codes/Standards

ASME A112.19.2/CSA B45.1

KOHLER® One-Year Limited Warranty

See website for detailed warranty information.

Available Colors/Finishes

Color tiles intended for reference only.

Color	Code	Description
	0	White
	96	Biscuit
	47	Almond
	NY	Dune
	95	Ice™ Grey
	G9	Sandbar
	33	Mexican Sand™
	K4	Cashmere
	58	Thunder™ Grey
	7	Black Black™

THE BOLD LOOK OF KOHLER®

Bancroft®

Pedestal Bathroom Sink

K-2347-1

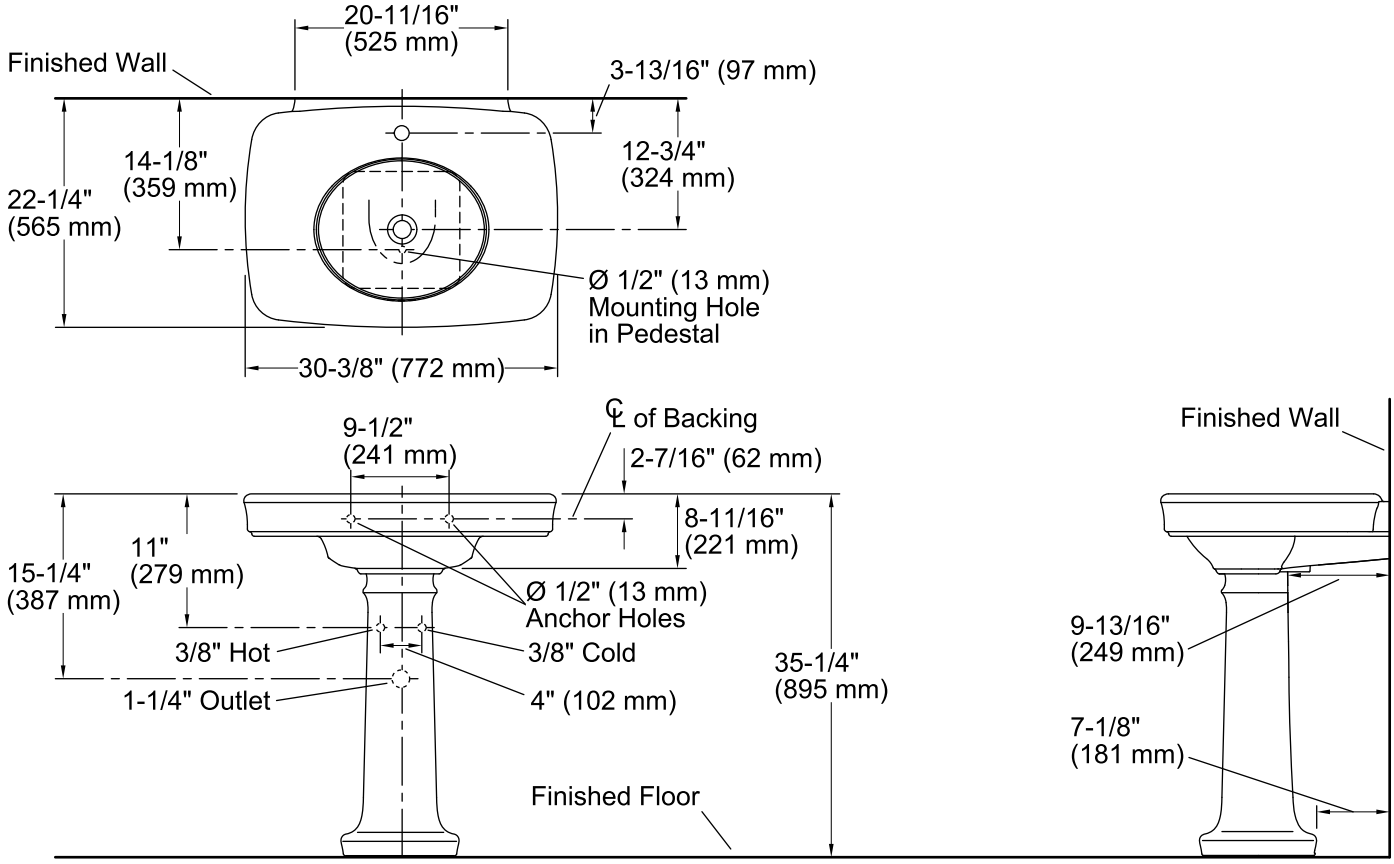

Technical Information

All product dimensions are nominal.

Bowl configuration:	Single
Installation:	Pedestal
Bowl area (Only):	Length: 17-1/8" (435 mm) Width: 13-15/16" (354 mm) Water depth: 5" (127 mm)
Number of deck holes:	1
Faucet hole(s):	1-3/8" (35 mm)
Drain hole:	1-3/4" (44 mm)

Notes

Install this product according to the installation instructions.