hansgrohe

Showerpipe Basic Set
Finishes : **n.a.** Part no. : **16181181**

Description

Features

- scope of supply: ½" NPT x G ½ supply nipples, Stainless steel spacing tool, Thread protector and plugs for flushing

Item details

List Price	$ 69.00

Compliance

UPC C ®

Product image

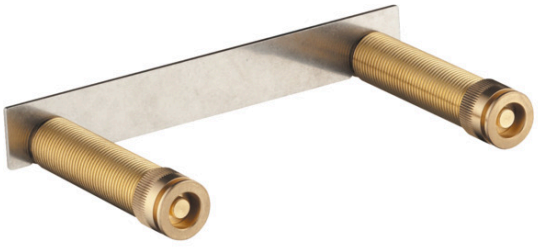
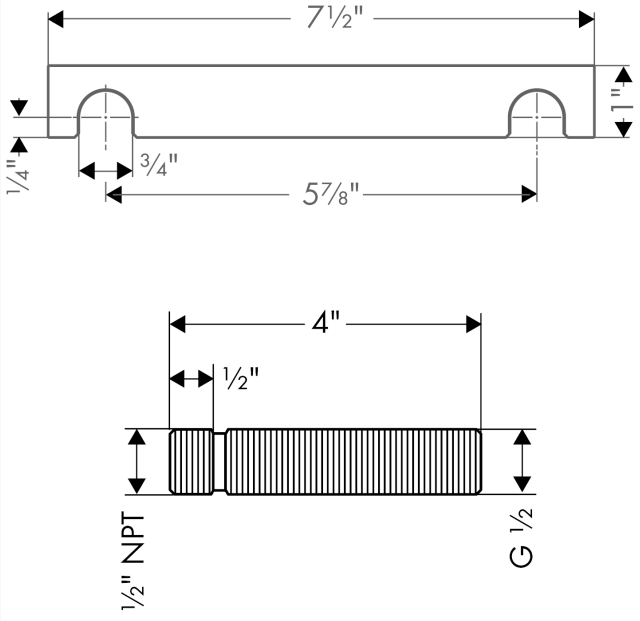
Scale drawing