hansgrohe

Talis S²
HighArc Kitchen Faucet, 1-Spray Pull-Down, 1.75 GPM
Finishes : **chrome** Part no. : **14872001**

Description

Features

- Swivel range 150°
- Aerated spray
- Number of sprays: 1 spray mode
- MagFit magnetic sprayhead docking
- Single-hole installation
- Flow: 1.75 GPM (6.6 L/Min)
- Ceramic cartridge
- ⅜" hoses
- Integrated double backflow prevention

Item details

List Price	$ 494.00

Technology

Quick Clean

Compliance

UPC C ®

ADA

Product image

Scale drawing

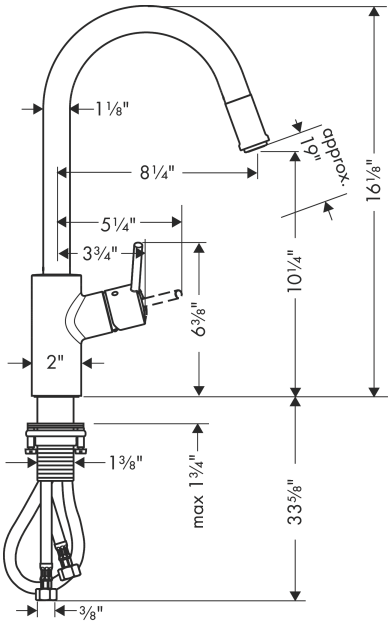

Talis S²
HighArc Kitchen Faucet, 1-Spray Pull-Down, 1.75 GPM
Finishes : **chrome** Part no. : **14872001**

Exploded drawing

Year of production: **>10/18**

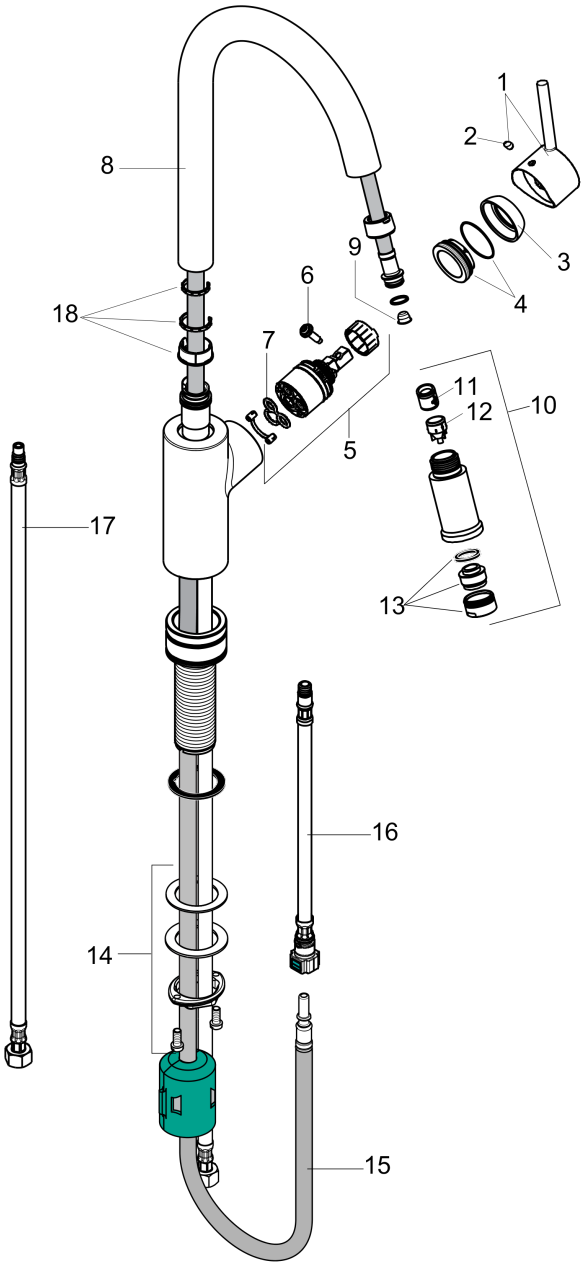

Talis S²
HighArc Kitchen Faucet, 1-Spray Pull-Down, 1.75 GPM
Finishes : **chrome** Part no. : **14872001**

Spare parts list

Year of production: **>10/18**

Pos.	Description	Part no.	Price	PU
1	handle	95560000	-	1
2	screw cover	96338000	-	1
3	flange	95498000	-	1
4	nut	97209000	-	1
5	cartridge, assy	92730000	-	1
6	locking screw for handle	95140000	-	1
7	seal	95008000	-	1
8	spout cpl.	95562000	-	1
9	filter	97735000	-	1
10	handspray	88659000	-	1
11	non return valve	93218000	-	1
12	set of non return valves DW 15	97350000	-	1
13	aerator M24x1 (15 l/min)	13913000	-	1
14	fixing set (Ø 34)	95049000	-	1
15	hose 1,50 m	95507000	-	1
16	connection hose 600 mm M10x1	95561000	-	1
17	connection hose 35½" M8x0,75 3/8"	96316001	-	1
18	set of lever collars	98365000	-	1
a	insert for spout	92161000	-	1