Tresham®

Vanity-top Bathroom Sink

K-2979-8

Features

- 8-inch center faucet holes.
- Rectangular basin.
- Overflow drain.
- Combines with the K-2604 vanity and other industry-standard 24-inch by 18-inch vanities.
- Coordinates with other products in the Tresham collection.

Material

- Vitreous china.

Installation

- Vanity top.

Recommended Products/Accessories

K-8998 P-Trap

Codes/Standards

ASME A112.19.2/CSA B45.1

KOHLER® One-Year Limited Warranty

See website for detailed warranty information.

Available Colors/Finishes

Color tiles intended for reference only.

Color	Code	Description
	0	White
	96	Biscuit
	47	Almond
	NY	Dune
	95	Ice™ Grey
	G9	Sandbar
	33	Mexican Sand™
	K4	Cashmere
	58	Thunder™ Grey
	7	Black Black™

Tresham®

Vanity-top Bathroom Sink

K-2979-8

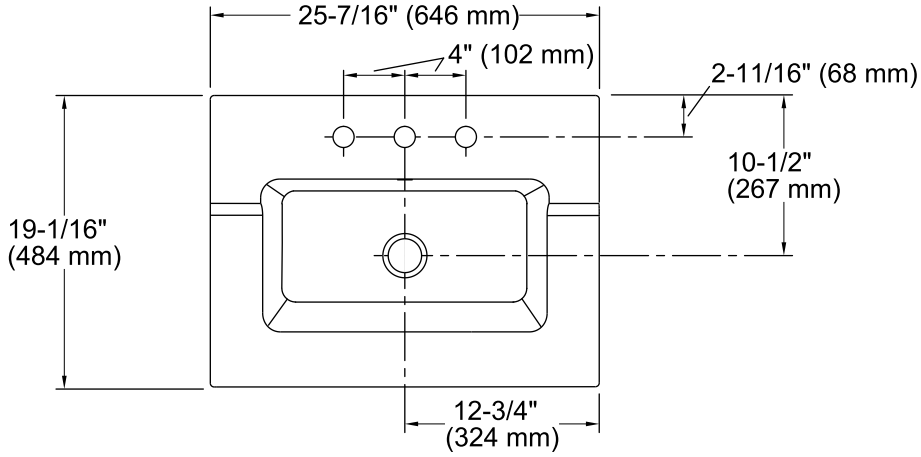

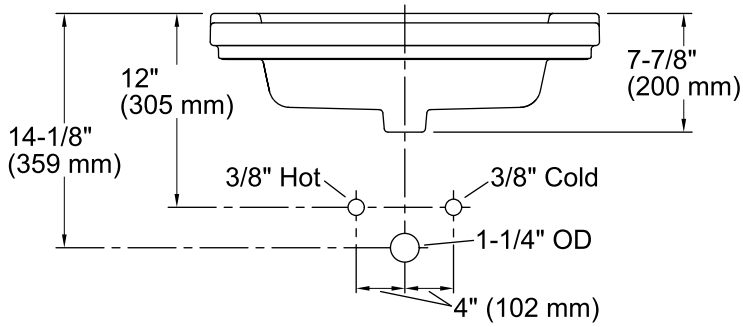

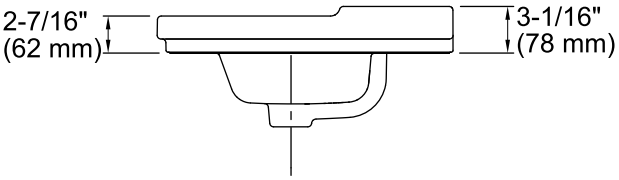

Technical Information

All product dimensions are nominal.

Bowl configuration:	Single
Installation:	Vanity top/ITB
Bowl area (Only):	Length: 19-1/16" (484 mm) Width: 10-1/2" (267 mm) Water depth: 5-1/4" (133 mm)
Number of deck holes:	3
Faucet hole spacing:	8" (203 mm)
Faucet hole(s):	1-3/8" (35 mm)
Drain hole:	1-3/4" (44 mm)
Template:	1162722-7, required, included

Notes

Install this product according to the installation instructions.

NOTICE: Countertop manufacturer or cutter must use the cut-out template provided with the product, or a current one provided by Kohler (call 1-800-4KOHLER). Kohler is not responsible for cutout errors when incorrect cut-out template is used.

When installing a pop-up drain to this bathroom sink, it may be necessary to bend the drain linkage to allow proper reach to the faucet lift rod.

NOTE: This bathroom sink is also designed for installation to the K-2604 vanity or with any other 24" (610 mm) x 18" (457 mm) vanity