CONNOR

17" SINK
4210CFY

ITEM DETAILS

OUTER DIMENSIONS 17" W x 14" D x 7½" H

INNER DIMENSIONS 15" W x 12" D x 5½" H

MATERIAL Vitreous china **COLOUR** Soft white

Oval undermount sink | Front overflow hole | Template and mounting hardware supplied | Faucet not included.

CERTIFICATIONS

| IAPMO cUPC
| ASME A112.19.2 / CSA B45.1-2013

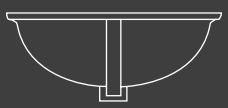

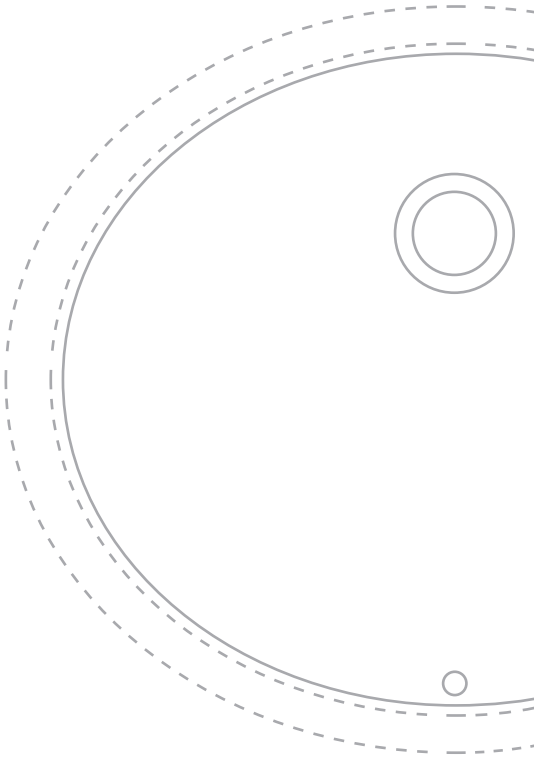

ISSUED FEBRUARY 2018

CONNOR

17" OVAL UNDERMOUNT SINK

☐ **4210CFY** Undermount Sink

PRODUCT SPECS:

- Vitreous china
- Front overflow hole
- Template and mounting hardware supplied

DIMENSIONS:

Outer:

430mm W x 355mm D x 190mm H

17" W x 14" D x 7½" H

Inner:

380mm W x 305mm D x 140mm H

15" W x 12" D x 5½" H

COMPLIANCE CERTIFICATIONS

Meets or exceeds the following:

- IAPMO cUPC
- ASME A112.19.2 / CSA B45.1-2013

SHIPPING

Cube	1.11
GW	16 lbs

TO BE SPECIFIED

Colour:

■ Soft White

NOTES: Dimensions of fixtures are nominal and may vary within the range of tolerances established by ASME standard A112.19.2. These measurements are subject to change or cancellation. No responsibility is assumed for use of superseded or voided pages.

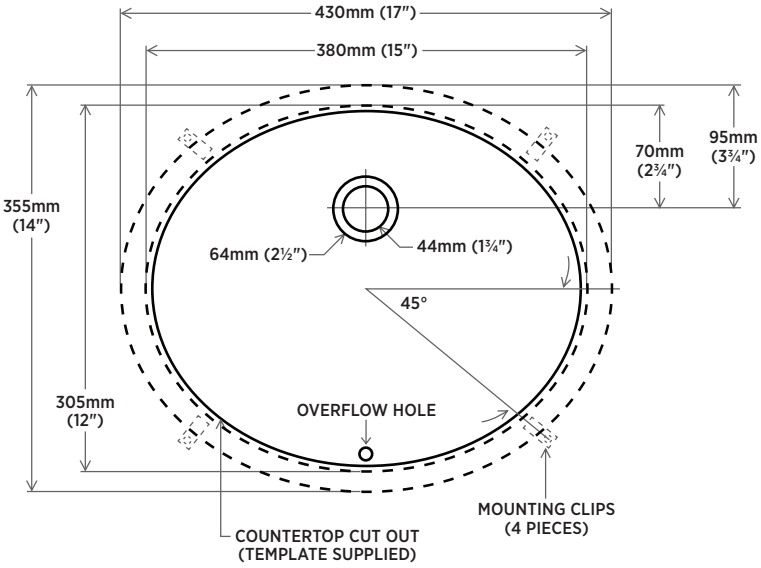

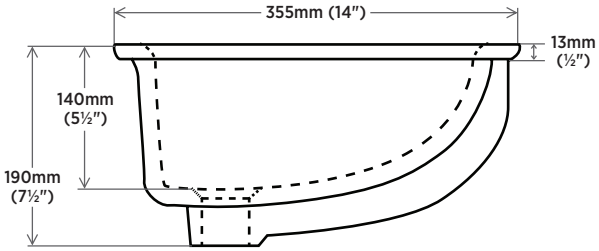

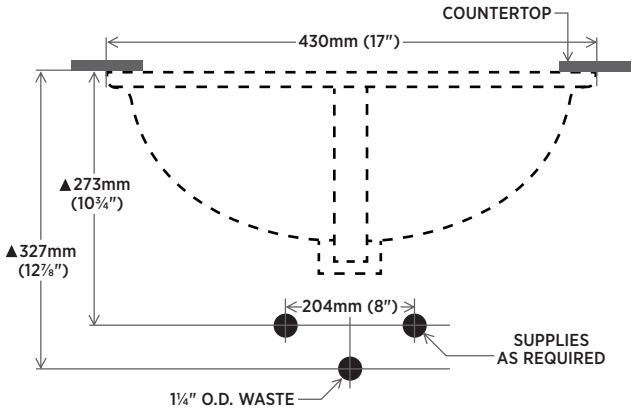

DETAIL OF MOUNTING CLIP

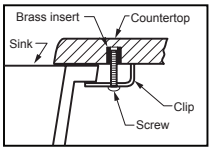

Note:
▲Dimensions shown for location of supplies and "P" trap are suggested.